LARP

SLAC NATIONAL ACCELERATOR LABORATORY

LARP Phase II Secondary Rotatable Collimator

5 min. Status Report

1st February, 2010

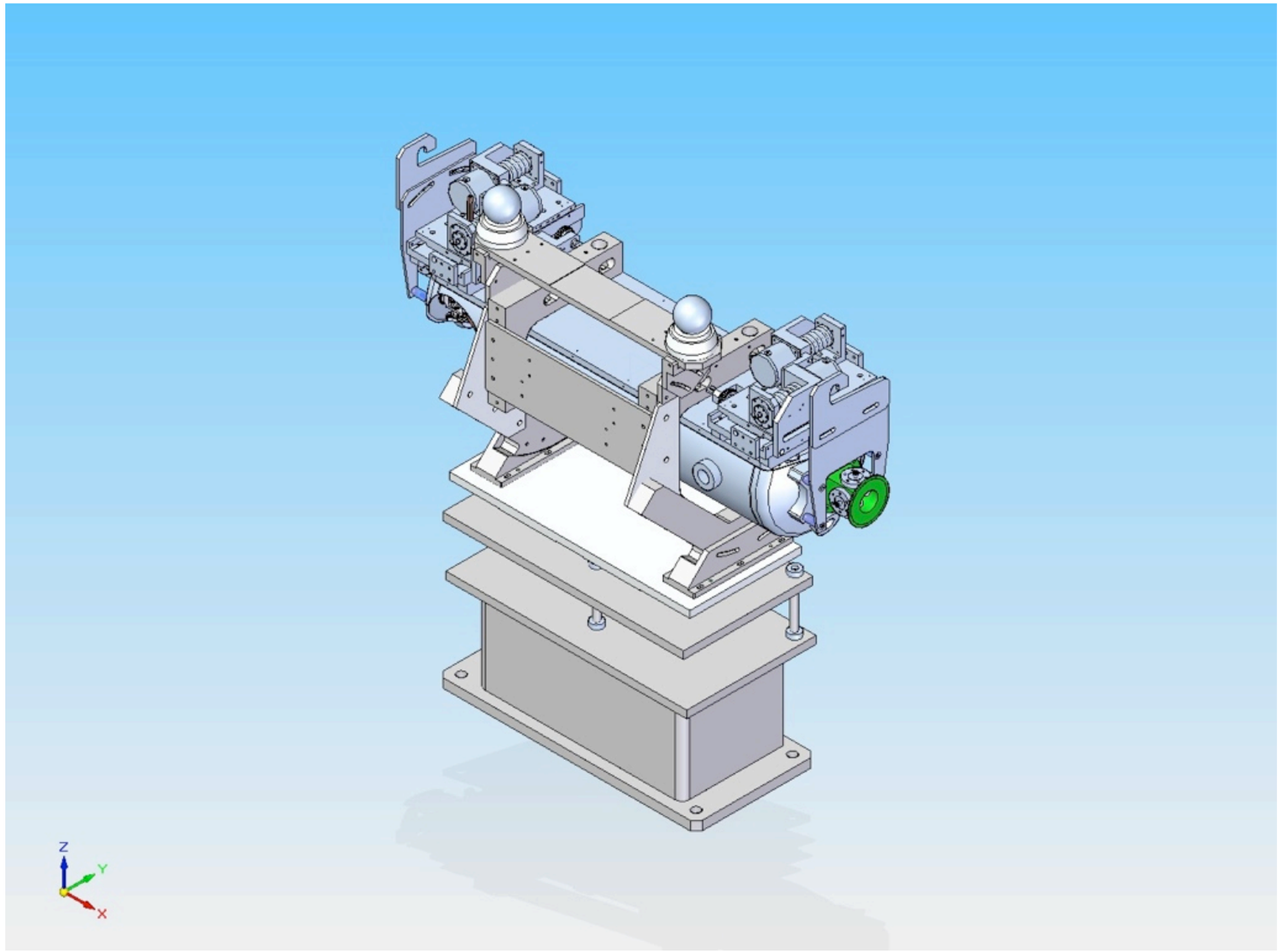

First Jaw (RC-0)

LARP

SLAC NATIONAL ACCELERATOR LABORATORY

- Back at SLAC
- Shown at right in bearing mounting fixture
  - facilitates flipping jaw to mount bearings vertically
- Rhodium coated image current bearings mounted
  - Resistance measurements show good electrical contact.
- Load carrying ceramic ball bearings being installed now...

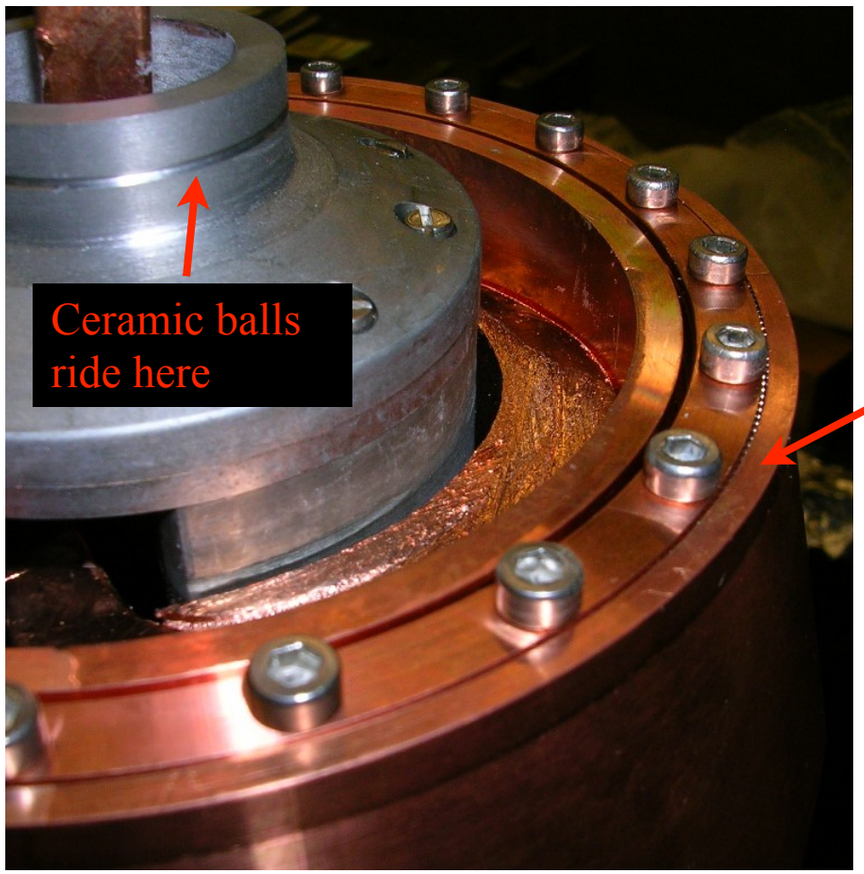

~300 1 mm Rhodium coated SS balls for image current

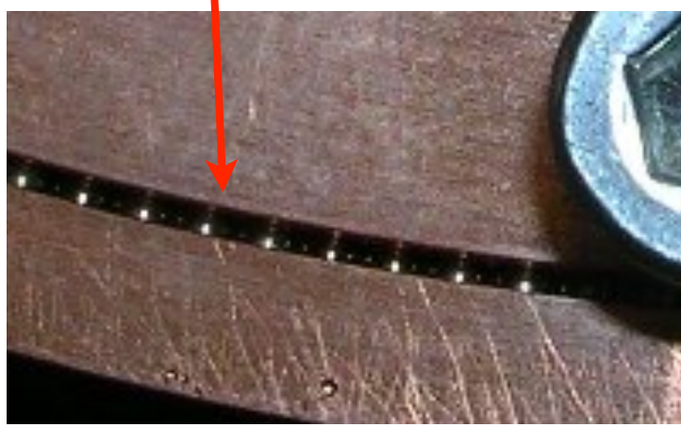

Second Jaw (RC-1)

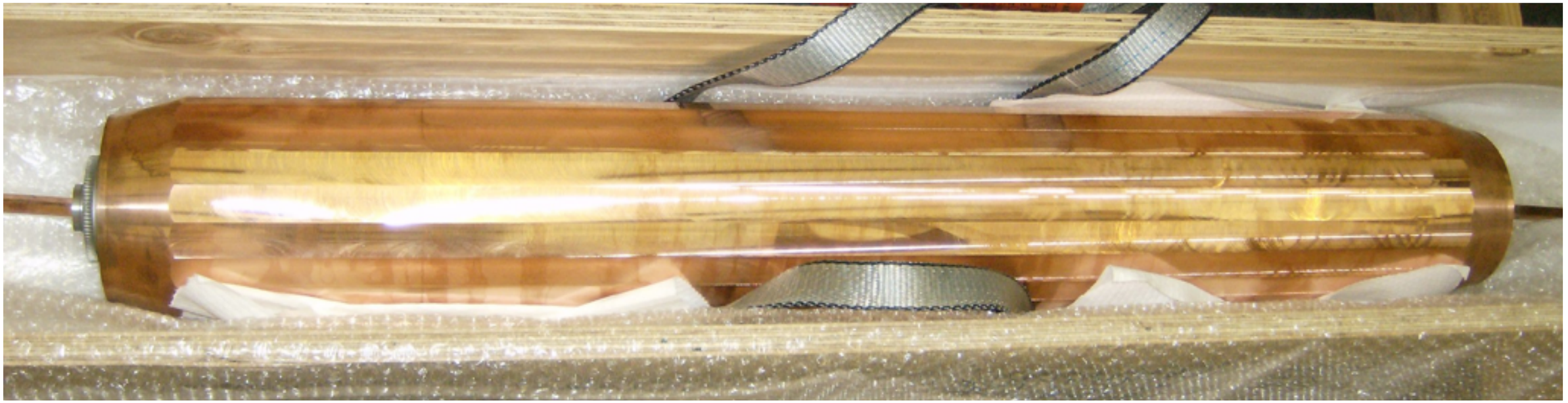

- Back at SLAC
- Ready for bearing mounting
- Once finished both jaws to go to metrology and then mounted on base plate (next slide...)

Base Plate and Vacuum Chamber

LARP

SLAC NATIONAL ACCELERATOR LABORATORY

- Base plate mounted on stand and drives attached.
- Jaws to be mounted after metrology.
  - Mechanical motion tests to begin after mounting with top off
- Chamber top currently undergoing weld seal vacuum tests, viewports and feedthrough being fabricated.

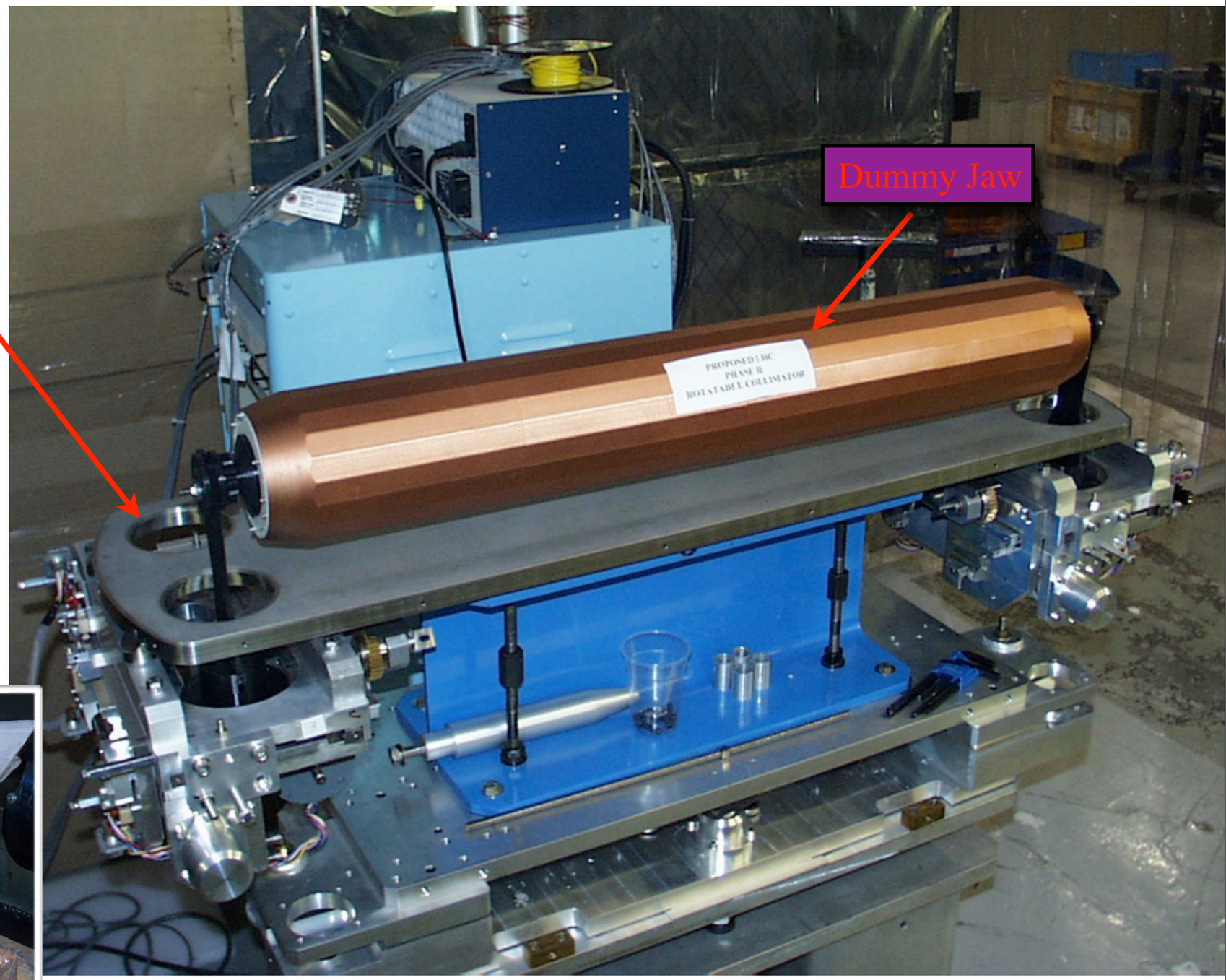

Schedule for RC Prototype for SPS

Feb 2010	Metrology tests of 2 jaws and assembly onto supports
March 2010	Bench tests with vacuum tank off
April 2010	RF tests with tank clamped to baseplate
May 2010	Weld shut, bakeout & vacuum test
June 2010	Post-bakeout mechanical and RF tests
July 2010	Float in schedule
August 2010	Ship to CERN